Technical data sheet

Clamp clip 2056 F-foot, 1-fold, metal pressure sleeve, FT

Item number: 1187402

Clamp clip with F-foot, metal pressure sleeve with rounded edges to protect the cable. For vertical and horizontal mounting of 1 single cable on flat bars. With 1-start screw thread on pressure sleeve, universal hexagonal screw head WAF10, with slot and cross recess. Suitable for assembly indoors and outdoors. We recommend the use of a counter-sleeve. In AC circuits the product shall not be used with single core cable in galvanised cable ladders and profile rails because of the inductive heating.

St	Steel
FT	Hot-dip galvanised

Master data

Item number	1187402
Type	BS-F1-M-12 FT
Description 1	Clamp clip 2056
Manufacturer	OBO
Dimension	08-12mm
Material	Steel
Surface	Hot-dip galvanised
Surface standard	DIN EN ISO 1461
Smallest sales unit	100
Unit of quantity	Piece
Weight	3.7 kg
Weight unit	kg/100 pc.
CO2 Footprint (GWP) Cradle-to-Gate	0,0941 kg CO2e / 1 Piece

Technical data sheet

Clamp clip 2056 F-foot, 1-fold, metal pressure sleeve, FT

Item number: 1187402

Dimensions

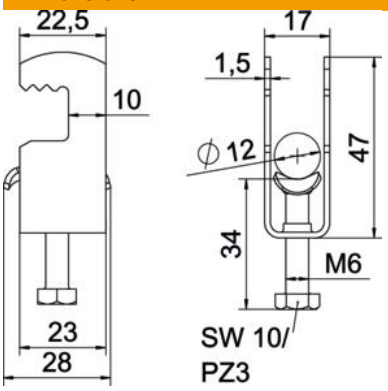

Length	22.5 mm
Width	17 mm
Height	47 mm
Plate thickness	1.5 mm
Dimension A	22.5 mm
Dimension B	17 mm
Dimension C	28 mm
Dimension G (mm)	M6
Dimension H	47 mm
Dimension L	34 mm
Dimension t	1.5 mm

Technical data

Number of cables/pipes	1
For pipe diameter, max.	12 mm
For pipe diameter, min.	8 mm
Thread	M6
Halogen-free	yes
Length of external dimensions	28 mm
Max. Tightening torque	3 Nm
With metal trough	yes
Mounting type	Flat profile
ROHS-conformant	yes
Slot width	10 mm
Clamping range D, max.	12 mm
Clamping range D, min.	8 mm
Surface addition	hot galvanised
Material addition	Steel
With counter-trough	no
Material of trough	Steel