# Technical data sheet

## Clamp clip 2056 F-foot, 1-fold, plastic pressure sleeve, FT

## Item number: 1187608

Clamp clip with F-foot, plastic pressure sleeve made of polypropylene. For vertical and horizontal mounting of 1 single cable on flat bars. With 1-start screw thread on pressure sleeve, universal hexagonal screw head WAF10, with slot and cross recess. Suitable for assembly indoors and outdoors. We recommend the use of a counter-sleeve. In AC circuits the product shall not be used with single core cable in galvanised cable ladders and profile rails because of the inductive heating.

HALOGEN FREE

St Steel

FT Hot-dip galvanised

### Master data

| | |
|---|---|
| Item number | 1187608 |
| Type | BS-F1-K-16 FT |
| Description 1 | Clamp clip 2056 |
| Manufacturer | OBO |
| Dimension | 12-16mm |
| Material | Steel |
| Surface | Hot-dip galvanised |
| Surface standard | DIN EN ISO 1461 |
| Smallest sales unit | 100 |
| Unit of quantity | Piece |
| Weight | 3.9 kg |
| Weight unit | kg/100 pc. |
| CO2 Footprint (GWP) Cradle-to-Gate | 0,0898 kg CO2e / 1 Piece |

# Technical data sheet

## Clamp clip 2056 F-foot, 1-fold, plastic pressure sleeve, FT

## Item number: 1187608

### Dimensions

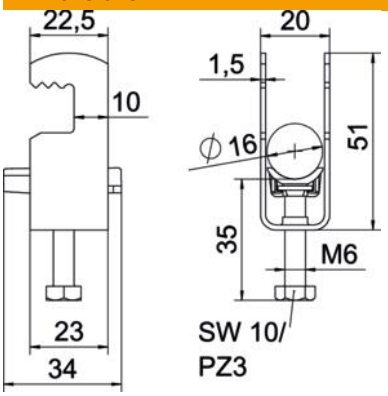


| | |
|---|---|
| Length | 22.5 mm |
| Width | 20 mm |
| Height | 51 mm |
| Plate thickness | 1.5 mm |
| Dimension A | 22.5 mm |
| Dimension B | 20 mm |
| Dimension C | 34 mm |
| Dimension G (mm) | M6 |
| Dimension H | 51 mm |
| Dimension L | 35 mm |
| Dimension t | 1.5 mm |

### Technical data

| | |
|---|---|
| Number of cables/pipes | 1 |
| For pipe diameter, max. | 16 mm |
| For pipe diameter, min. | 12 mm |
| Thread | M6 |
| Halogen-free | yes |
| Length of external dimensions | 34 mm |
| Max. Tightening torque | 3 Nm |
| With plastic trough | yes |
| Mounting type | Flat profile |
| ROHS-conformant | yes |
| Slot width | 10 mm |
| Clamping range D, max. | 16 mm |
| Clamping range D, min. | 12 mm |
| Surface addition | hot galvanised |
| Material addition | Steel |
| With counter-trough | no |
| Material of trough | Plastic |
| Material quality of trough | Polypropylene |