Technical data sheet

Wall and support bracket AWG 15 A2

Item number: 6420640

Light-duty wall and support bracket with welded head plate for screwless mesh cable tray fastening.

Fastening of the bracket to the U support of width 400 mm or greater using a hexagonal bolt through both sides of the support. Please insert suitable spacers.

AW US3 US5 US7

A2	Stainless steel
2B	Bright, treated

Master data

Item number	6420640
Type	AWG 15 61 A2
Description 1	Wall and support bracket
Description 2	for mesh cable tray
Manufacturer	OBO
Dimension	B610mm
Colour	stainless steel
Material	Stainless steel 1.4301
Surface	Bright, treated
Surface standard	
Smallest sales unit	1
Unit of quantity	Piece
Weight	80 kg
Weight unit	kg/100 pc.
CO2 Footprint (GWP) Cradle-to-Gate	4,8946 kg CO2e / 1 Piece

Technical data sheet

Wall and support bracket AWG 15 A2

Item number: 6420640

Dimensions

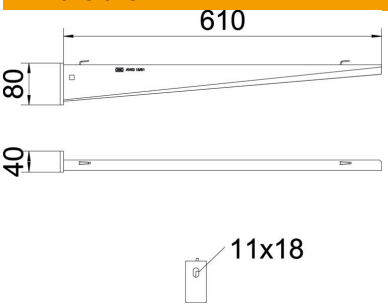

Length	40 mm
Width	610 mm
Height	80 mm
Dimension A	40 mm
Dimension B	610 mm
Dimension H	80 mm

Technical data

Version for	Wall and support bracket
F in kN	1.5 kN
Maintain electrical functions	no
for width max.	600 mm
for width min.	600
Hole diameter	11 mm
ROHS-conformant	yes
Rustproof steel, pickled	yes
Angle range, max.	90 mm
Angle range, min.	90 mm

Loads

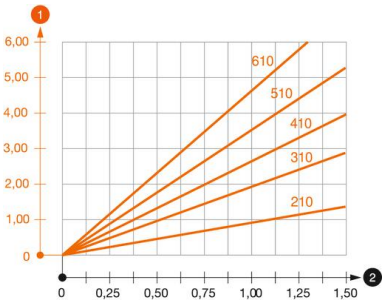

Load diagram, bracket type AW G 15

1. Bending of the bracket tip at permitted bracket load
2. Permitted bracket load in kN without man load
3. Bracket length in mm

Characteristic anchor load values for wall and support bracket AW G 15

Wall fastening								
	Max. load [kN]							
	Bracket width [mm]							
Anchor type	110	160	210	310	410	510	560	610
BZ3 10x90/0-30	1.5	1.5	1.5	1.47	1.25	1.13	0.95	0.94

Max. Belastung F ges. = Kabelgewicht + Kabelrinne + Ausleger. Die angegebenen Werte basieren auf gerissenem Beton der Festigkeitsklasse C20/25. Die Einbaubedingungen der ETA-Zulassung (Dübel) sind zu beachten!