Technical data sheet

Quick clip, aluminium

Item number: 2149916

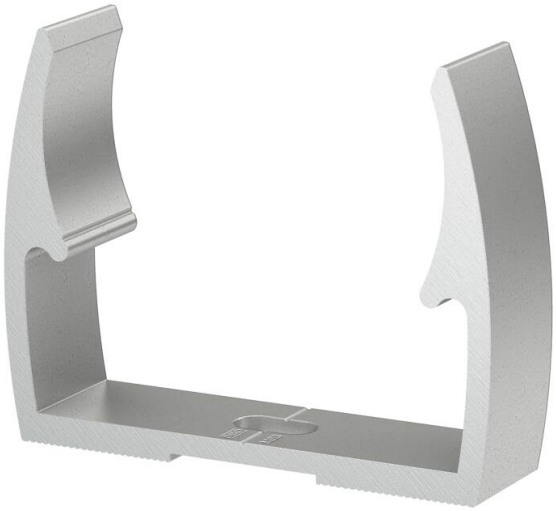

OBO Quick clip, type ALQ M, for all metric ALU pipe systems, as well as light-duty and heavy-duty insulation pipes. Suitable for mounting the OBO pipe system, material: aluminium. Pipe centring aids allow optimal attachment of the pipe and automatically turn the clip into the correct position.

Slot for side alignment during mounting with wood screw or knock-in anchor.

Recommended fastening spacing 50−60 cm.

CE

Alu Aluminium

Master data

Item number	2149916
Type	ALQ M16
Description 1	Quick clip
Manufacturer	OBO
Dimension	M16
Material	Aluminium
Smallest sales unit	100
Unit of quantity	Piece
Weight	0.78 kg
Weight unit	kg/100 pc.
CO2 Footprint (GWP) Cradle-to-Gate	0,1324 kg CO2e / 1 Piece

Technical data sheet

Quick clip, aluminium

Item number: 2149916

Dimensions

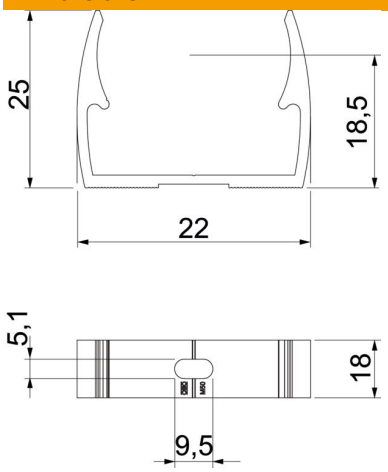

Dimension A	22 mm
Dimension B	18 mm
Dimension E	5.1 mm
Dimension F	9.5 mm
Dimension h	18.5 mm
Dimension H	25 mm

Technical data

Expandable	no
Number of cables/pipes	1
Pull-out value	55 N
Fastening type	Screw hole
Closed	no
Halogen-free	no
With inlay	no
Nominal size	16
ROHS-conformant	yes
Clamping range D, max.	16 mm
Clamping range D, min.	16 mm
Permitted temperature range, max.	90 °C
Permitted temperature range, min.	-25 °C
UV-resistant	yes
Resistance to impact	2 J
Resistance to lateral load	105 N
Resistance to axial load	15 N
Resistance against corrosion	High