Technical data sheet

Clamp clip, single, plastic pressure trough, FT

Item number: 1160451

Suitable for all C profile rails with slot width 16–17 mm.
Hot-dip galvanised steel clip and bolt, polypropylene pressure trough, halogen-free, colour light grey RAL 7035.
Version with welding and/or locknuts for use under difficult circumstances and for shake protection on request.

HALOGEN FREE | CE | H | 16-17

St Steel

FT Hot-dip galvanised

Master data

Item number	1160451
Type	2056 46 FT
Description 1	Clamp clip
Manufacturer	OBO
Dimension	40-46mm
Material	Steel
Surface	Hot-dip galvanised
Surface standard	DIN EN ISO 1461
Smallest sales unit	100
Unit of quantity	Piece
Weight	10.9 kg
Weight unit	kg/100 pc.
CO2 Footprint (GWP) Cradle-to-Gate	0,1835 kg COe / 1 Piece

Technical data sheet

Clamp clip, single, plastic pressure trough, FT

Item number: 1160451

Dimensions

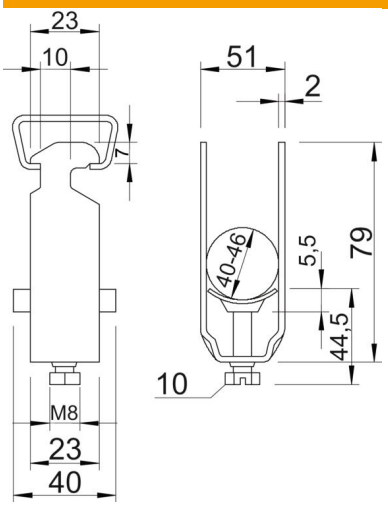

Dimension A	23 mm
Dimension B	51 mm
Dimension C	40 mm
Dimension G (mm)	M8
Dimension H	79 mm
Dimension L	44.5 mm
Dimension t	2 mm
Dimension x	5.5 mm

Technical data

Number of cables/pipes	1
for rail with slot width (with interval), max.	17 mm
for rail with slot width (with interval), min.	16 mm
Halogen-free	yes
Max. Tightening torque	5 Nm
With plastic trough	yes
With metal trough	no
Mounting type	Profile rail
ROHS-conformant	yes
Impact-resistant	no
Clamping range D, max.	46 mm
Clamping range D, min.	40 mm
Surface addition	hot galvanised
Material addition	Steel
With counter-trough	no
Material of trough	Plastic
Material quality of trough	Polypropylene