Technical data sheet

Clamp clip, single, FT plastic pressure trough

Item number: 1175904

Suitable for all C profile rails with slot width 18 mm and 22 mm.

Polypropylene pressure trough, halogen-free, colour light grey RAL 7035.

HALOGEN FREE | CE | U | 18 | 22

St Steel

FT Hot-dip galvanised

Master data

Item number	1175904
Type	2056U 90 FT
Description 1	Clamp clip
Manufacturer	OBO
Dimension	82-90mm
Material	Steel
Surface	Hot-dip galvanised
Surface standard	DIN EN ISO 1461
Smallest sales unit	25
Unit of quantity	Piece
Weight	26.2 kg
Weight unit	kg/100 pc.
CO2 Footprint (GWP) Cradle-to-Gate	0,4613 kg COe / 1 Piece

Technical data sheet

Clamp clip, single, FT plastic pressure trough

Item number: 1175904

Dimensions

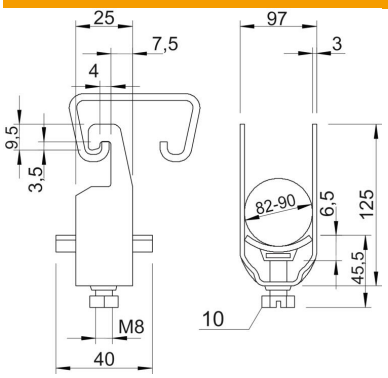

Dimension A	25 mm
Dimension B	97 mm
Dimension C	40 mm
Dimension G (mm)	M8
Dimension H	125 mm
Dimension L	45.5 mm
Dimension t	3 mm
Dimension x	6.5 mm

Technical data

Number of cables/pipes	1
for 1 cable H	125 mm
for 1 cable L	45.5
for rail with slot width (with interval), max.	22 mm
for rail with slot width (with interval), min.	18 mm
Halogen-free	yes
Max. Tightening torque	5 Nm
With plastic trough	yes
With metal trough	no
Mounting type	Profile rail
ROHS-conformant	yes
Impact-resistant	no
Clamping range D, max.	90 mm
Clamping range D, min.	82 mm
Surface addition	hot galvanised
Material addition	Steel
With counter-trough	no
Material of trough	Plastic
Material quality of trough	Polypropylene