Technical data sheet

Collecting clamp Grip 20, plastic, OBO EcoLine

Item number: 2205406

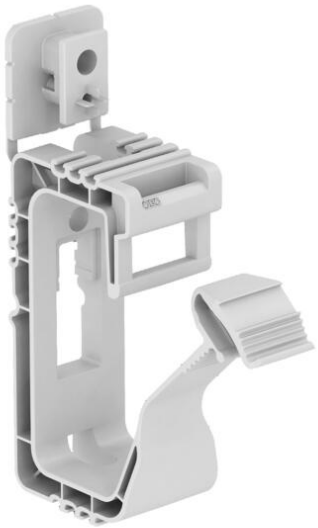

Collection clamp with pointed fastening element, for the mounting of up to 20 cables NYM 3 x 1.5 mm2 on walls or ceilings. Fastening with impact anchor or push-fit anchor. Also suitable for the fastening with gas- and battery-operated firing tools of the brands Bosch, Fischer and Spit (nose diameter Ø 7 mm). Fastening hole: Ø 6 mm. Recommended fastening distance at full assignment 250–400 mm, depending on the resprective applicable national specifications/ standards.

Polypropylene Eco

Master data

Item number	2205406
Type	2031 20 ECO
Description 1	Grip collecting clamp
Available from	08.03.2026
Manufacturer	OBO
Dimension	20x NYM3x1,5
Colour	Light grey; RAL 7035
Material	Polypropylene Eco
Smallest sales unit	50
Unit of quantity	Piece
Weight	1.97 kg
Weight unit	kg/100 pc.
CO2 Footprint (GWP) Cradle-to-Gate	0,0343 kg CO2e / 1 Piece

Technical data sheet

Collecting clamp Grip 20, plastic, OBO EcoLine

Item number: 2205406

Dimensions

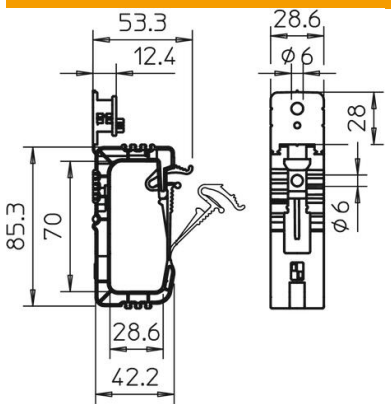

Technical data

No. of conductors NYM 3 x 1.5	20
Flame-resistant version	no
Breaking load	0.32 kN
Maintain electrical functions	no
Halogen-free	yes
With anchor	no
ROHS-conformant	yes